Solar PV Solutions

Preliminary Site Survey Form

Table of Contents

1. Introduction 3
1.1. Site Walkthrough Tips 3
1.2. Evaluation of Site Shading 3
2. Contact Details 4
3. Physical Information 4
Site Details 4
3.1. Roof Details 4
Pictures 5
3.2. Ground Details 6
Pictures 7
3.3. Parking Area Details 8
Pictures 8
4. Electrical Installation 10
Pictures 10
5. Technical Room Information 11
Pictures 12
6. Existing Power Source(s) 14
7. Accessibility for Installation and Maintenance 16
7.1. Main Site Access 16
7.2. On-site Access 16
7.3. Roof Access 16
8. Additional Information 18
9. Signature 19
Annex A – Sample Pictures for Solar Panel Positioning 20
Annex B – Examples of Shading 21
Annex C – Examples of Electric Installation Pictures & Diagram 22
Annex D – Examples of Generator Pictures 23

This document was developed in close collaboration with UNDP, Office of Information Systems & Technology, Global ICT Advisory Unit.

1. Introduction

Thank you for your interest in solar PV solutions, and welcome to the **Self-Assessment and Pre-Site Survey**, which is the first in the 7-Step Process for Installing Solar PV Systems.

This document aims to guide the UNCT in undertaking a preliminary site survey, in preparation of their business case for procuring and installing a solar PV solution.

UNDP's Global ICT Advisory unit (GIA) will review this survey, which is a screening tool designed to help with identifying the best suitable location(s) for and configuration of your solar PV system.

Before you start, please take into consideration the following:

1.1. Site Walkthrough Tips

While undertaking your pre-site survey, here are some useful tips:

- Take a video record during the walkthrough
- Talk and give descriptions to the camera
- Photograph everything – please insert as many pictures as you can in each of the sections
- Any and all abnormalities should also be photographed
- Where possible or needed, provide sketches and drawings
- Take into account the time of the year
- Use the help of your local electrician and generator specialist for Section 4 – Electrical Installation and Section 6 – Existing Power Source(s)

1.2. Evaluation of Site Shading

Ideally, any solar PV installation requires **shade-free** placement; any shadow over the PV panels means zero output. In fact, even small shadows can have a disproportionate impact on energy production, please see Annex B for such examples. This is why a careful assessment of any potential source of shading must be conducted.

Most common examples are **trees, buildings** but it can also be obstructions on the roof itself, such as **telecommunication equipment** (antennas, satellite dishes) or any **HVAC equipmen**t, as well as **chimneys**, **windows**, **pipes, power lines**, **poles**, **neighboring roofs**.

A thorough shading analysis should:

- Be undertaken during a bright, sunny day during summer/hot season.
- Take into account any obstacles (as mentioned above)
- Consider future shading factors, such as building construction, growing trees

Overall, assessing shades is essential for:

- Choosing the optimum location for your solar panels
- Identifying issues early in the process
- Ensuring sufficient energy production

2. Contact Details

Step 1 Please complete the following table. Please feel free to copy the table as many times as necessary.

Country Office Name	
Physical Address	
Contact Name	
Contact E-mail	
Contact Phone	
Survey Date	
Other Participants in Site Survey (name, e-mail, phone)	

3. Physical Information

Solar systems can be mounted on roofs, integrated into awnings/shades, wall-mounted or installed at ground level on rack structures. Generally, roof-mounted systems are preferred but if such set up is not option, for obstruction, space or shades reasons, the other alternatives offer also advantages. See Annex A for the different mounting systems.

Site Details

Step 2 Please indicate all buildings that are expected to install a solar PV system. You may want to copy as many rows in the below table as needed.

Site and Building name 1 *(e.g. Main building, UN Clinic, Building one etc.)*	
Site and Building name 2 *(e.g. Main building, UN Clinic, Building one etc.)*	
...	

3.1. Roof Details

Roof-mounting systems are generally preferred since they require shorter runs, are less vulnerable to vandalism and are out of sight. If you have construction documents showing the roof size, dimensions and structural drawings, please attach these as they will reduce costs and greatly facilitate the design and construction of your solar PV installation.

Additionally, you are advised to carefully check the roof construction, in case of any structural strengthening is needed.

Is your roof in bad condition? No worries, the best time to install a roof-mounted solar PV system is during roof refurbishment of replacement. As solar panels generally have a lifespan of 20-25 years, you ideally should have a roof that doesn't need any repairs for the next 20 years. If your roof is relatively old and needs to be replaced/refurbished in the near future, it would be good to do this just before or during the PV system installation.

Step 3 Please complete the following table for each building/site presented for consideration. Make as many copies of below table as needed.

Site and Building name *(e.g. Main building, UN Clinic, Building one etc.)*	
Type of roof (asphalt, shingles, rubber membrane, … see Wikipedia page)	
Roof orientation (N, S, SE, etc.)	
Roof height (meters, Gutter height above the ground)	
Roof pitch (angle from the horizontal)	
Roof size (square meters)	
Type of roof covering (e.g. flat tiles)	
Condition of roof (poor, fair, good, excellent, new) any other kind description (secure, damaged, leaking, etc.)	
Equipment/Obstructions on the roof (windows, satellites, antennas, chimneys etc.)	
Shading Evaluation Any shading/obstacles on position suitable for panels? Please be as elaborate as possible. Kindly refer to Section 1.2 for further information.	

Pictures

Step 4 Please insert as many different pictures of the roof and its surroundings as you can, directly from the roof and from various angles. The idea is to have the best visualization of the roof, its surroundings and its sources of shading. If possible, take a panoramic picture. Make as many copies of the boxes below as necessary; if you intend to install a solar PV system in multiple buildings, please copy the entire table as many times as appropriate.

Pictures of the ground of the roof – 1	*Pictures of the ground of the roof – 2, etc.*

Pictures of the surroundings – 1	*Pictures of the surroundings – 2, etc.*
Panoramic Photograph - 1	

Please indicate any other information/comments/uncertainties you find important

3.2. Ground Details

Ground-mounted solar PV systems offer easy access, high visibility, and easy expansion with additional panels. Please refer to Annex A for examples.

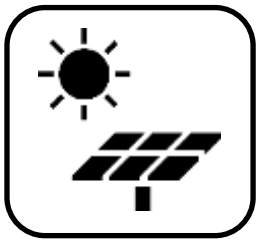

Step 5 Please complete the below table **only if** you are considering a ground location for your solar panels; otherwise please proceed to Step 6.

Area of the open space proposed for solar panels (m^2)	
Approximate distance from battery room (m)	
Any paving or other solid barrier between suitable ground position for panels and battery room?	
Shading Evaluation Any shading/obstacles on position suitable for panels? Please be as elaborate as possible. Kindly refer to Section 1.2 for further information.	

Please indicate any other information/comments/uncertainties you find important

Pictures

Step 6 Please insert as many different pictures of the proposed ground space for solar panels, and its surroundings as you can, from various angles. The idea is to have the best visualization of the ground space, its surroundings and its sources of shadings. If possible, take panoramic pictures. Make as many copies of the boxes below as necessary; if you intend to install a solar PV system in multiple ground-mounted locations, please copy the entire table as many times as appropriate.

Pictures of the ground– 1	*Pictures of the ground– 2, etc.*

Pictures of the surroundings – 1	*Pictures of the surroundings – 2; etc.*
Panoramic Photograph – 1	

3.3. Parking Area Details

Step 7 Please fill out the below table **only if** you are considering mounting solar panels as parking shades. For an example, please refer to Annex A.

Area of the parking lot (m^2) *If several of them, please indicate and describe for each*	
Is there existing roofing for shade? *If yes Describe type of roof.*	
Roof orientation?	
Approximate height of envisaged or existing shade (m)	
Type of paving between parking lot and battery room	
Distance between parking lot and battery room (m)	

Pictures

Step 8 Please insert as many different pictures of the proposed parking space(s) that you see fit for solar shades, and its surroundings as you can, from various angles. The idea is to have the best visualization of the parking space(s), its surroundings and its sources of shadings. If possible, take panoramic pictures. Make as many copies of the boxes below as necessary; if you intend to install a solar PV system in multiple parking locations, please copy the entire table as many times as appropriate.

Pictures of the parking lot – 1	*Pictures of the parking lot– 2, etc.*
Pictures of the surroundings – 1	*Pictures of the surroundings – 2; etc.*
Panoramic Photograph - 1	

Please indicate any other information/comments/uncertainties you find important

4. Electrical Installation

Ideally, solar PV systems should be as close to the electric meter as possible to minimize wire transmission losses. Help from a local electrician is strongly advised here.

Step 9 Please complete the table below. It is important to look at existing wiring and determine if any work is needed (potential rewiring routes, etc.)

Existence of cable path from roof position where panels can be installed to battery room (if using batteries)	
Approximate length of the cable path (m^2)	
Approximate radius of cable conduit	
Estimated cable length from roof to the fuse board	
Metering arrangements (location & meter type)	
Extra fuse way in the main fuse box	Yes/No
Wall space by the fuse for the inverter?	Yes/No
Type of incoming supply	Single phase / 3 phase
....	

Pictures

Step 10 Please insert as many **pictures of the cables, the electric meters, the electric control panel, their label plates and an electric supply diagram**. If possible, take panoramic pictures. Make as many copies of the boxes below as necessary. Please refer to Annex C for examples.

Pictures of the cable conduit – 1	*Pictures of the cable conduit – 2, etc.*
Pictures of the electric meter – 1	*Pictures of the distribution board – 2; etc.*

Pictures of label plate	……

Please indicate any other information/comments/uncertainties you find important

5. Technical Room Information

Ideally, the technical room must host both the battery banks and the inverter(s) in order to minimize losses. Please note that – and depending on the need for battery backups – the battery equipment can be quite cumbersome. Considerations for inverters location include noise, heat and exposure to weather.

For your consideration, there are several options to select the right location; an existing and suitable room, an existing room that needs construction and improvement work, or the construction of a detached technical room.

Step 11 Please complete the table below as accurately as possible.

Size of room for batteries (m^2)	
Is the battery room air-conditioned? (Yes/No)	
Is the room constantly maintained at a temperature of 20-25 degrees Celsius?	
Is the room in good conditions (yes/No) *If yes please describe*	
Is construction work required?	
If none of the above can be answered, are you planning on building a separate room? Yes/No	

Pictures

Step 12 Please insert as many different pictures of the potential location(s) for the technical room (such as basement room, available spaces in a room, available space for construction, etc.) with various angles if possible. The idea is to have the best visualization of the suitability of the space(s). Make as many copies of the boxes below as you feel.
If your country office has several potential locations to propose, please repeat the operation.

Pictures of the room– 1	*Pictures of the room– 2, etc.*
Pictures of the available space for construction– 1	*Pictures of the available space for construction – 2; etc.*

Please indicate any other information/comments/uncertainties you find important

6. Existing Power Source(s)

If UNDP is the lead Agency in this solar PV installation project, please ensure to complete all necessary information in UNDP's **ICT Registry Index**, which can be found at https://ictregistry.undp.org/.

Step 13 Please provide pictures of your generator(s), of their matriculation plate, wiring diagram and their specification sheet. Makes as many copies as needed. Please refer to Annex D for examples.

Generator 1 – Name (e.g. Main, UN Clinic, primary, secondary, etc.)	*Generator 1– Matriculation Plate*
Generator 1 – Spec sheet	*Generator 1 – Wiring Diagrams.*

Please indicate any other information/comments/uncertainties you find important

7. Accessibility for Installation and Maintenance

This part is to identify whether there is sufficient and safe site access for the both construction and future maintenance work of the solar PV system. Installation work implies carrying and transporting heavy and cumbersome equipment. Maintenance work – depending on the climate conditions e.g. rainy, dust - may require frequent access to the rooftop to clean the panels. Improvement works happen more extraordinarily for replacement of panels or conduits.

Step 14 Please complete the below tables if relevant and as thoroughly as possible, with descriptions and comments.

7.1. Main Site Access

Is the site access via a public or private road?	
What is the condition of the road? (Concrete/Asphalt/Dirt)	
Is width sufficient for 40' Commercial Trailers?	
Any curves that are too narrow?	
Are there any bridges with height or weight restrictions?	Yes/No
Will trees have to be cut back to accommodate trucks?	

7.2. On-site Access

Is there enough land for a truck to be off-loaded and turned around?	
Are there several points of ingress/egress on the site? *Please indicate if there is one/two or more points for ex.*	
Land Use/Soil Type	

7.3. Roof Access

Is the roof area safely accessible from the ground?	Yes/No
Is there safe access on the roof area from outdoor stairs?	Yes/No
Are scaffolding or/and stages needed for construction work?	Yes/No
Is there safe access pathways on the rooftop? Please describe if needed. Kindly refer to Section 3.1	
Is there two points of ingress/egress to the roof? *Please choose NO if there is only one.*	Yes/No
Is there sufficient access pathways on the rooftop? *Describe if there is sufficient space, presence or obstacles, if incommodious etc.*	

Please indicate any other information/comments/uncertainties you find important

8. Additional Information

If you have any other information regarding the above sections, or other elements that are/could be related to the site survey in any aspects, please let us know below.

9. Signature

Signed out by the Pre-Site Surveyor:

I have performed the survey at this site. I certify that the information contained in this report is correct:

Signed:_____ Date:_____
Print Name:_____
Title:_____
Organization:_____ Country:_____
Phone:_____ Email:_____

Annex A – Sample Pictures for Solar Panel Positioning

Parking Lot Position 	**Roof Mounting**
Ground Positioning 	**Ground Position**

Annex B – Examples of Shading

Little shadow - big impact on generation	

Annex C – Examples of Electric Installation Pictures & Diagram

Electric Meter

Label Plate

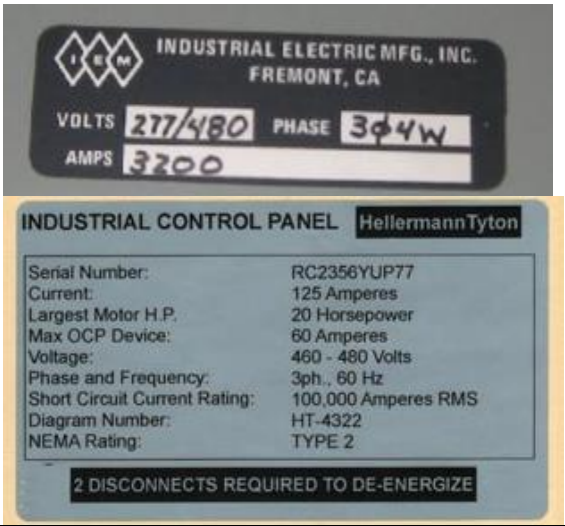

Electric Panel

Electric Supply Diagram

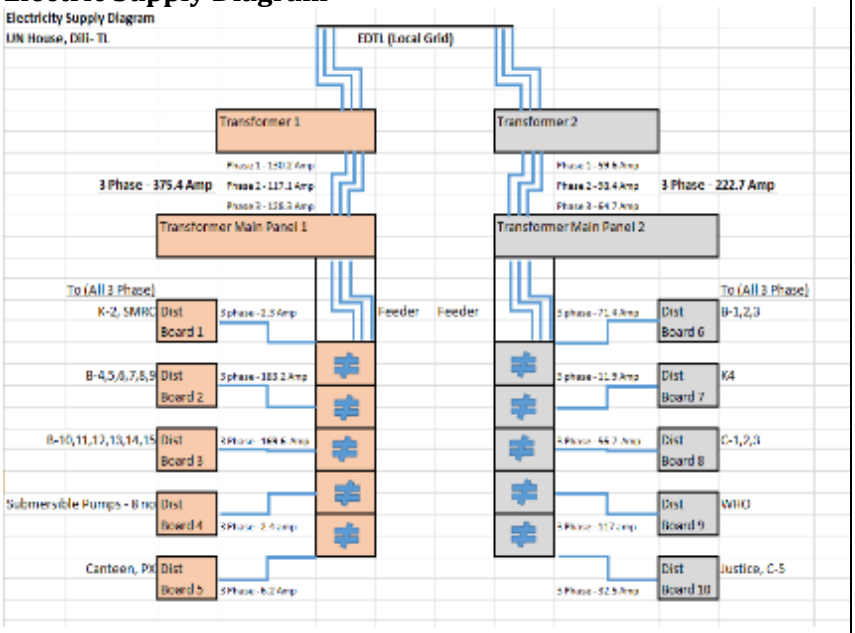

Annex D – Examples of Generator Pictures

Nameplate

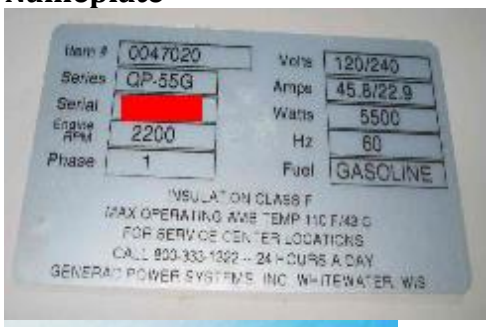

Wiring Diagrams

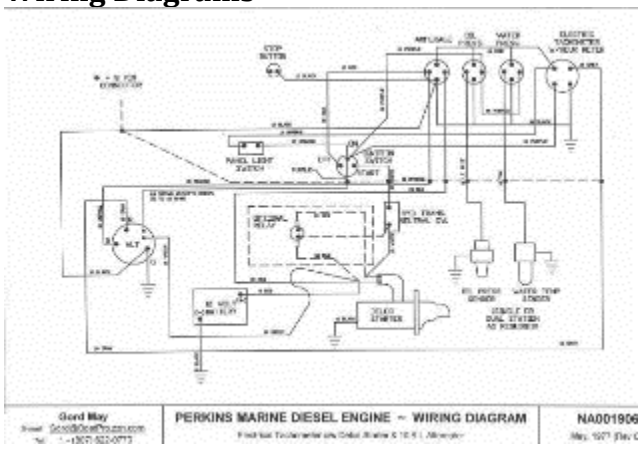

Spec sheet

Technical Data Sheet

Generating sets model:
400V,50Hz,1500 rpm

Engine Model:		Cummins 4BTA3.9-G2
Type		4 cylinder,4 cycle diesel
Aspiration		Turbocharged
Bore/Stroke	mm	102X120
Compress the ratio		16.5:1
Cooling system		Water-cooled
100% Load Fuel Consumption	L/H	12.5
Engine Speed/Frequency	RPM/Hz	1500/50HZ
Rated Output	kw/bHP	36/49
Exhaust air flow	(m3/min)	135.6
Coolant Capacity	L	28
Starting System		Electric 24 volt DC
Displacement	L	3.9
Lubricant system Capacity	L	9
Battery Voltage / Capacity		24VDC
Governing Type		Electrical (GAC governor)
Exhaust Gas Temperature	℃	475
Exhaust Gas flow	m3/min	9.96
Noise level	dBA@7m	≤70dBA(canopy type)

Genset Option Features

- Low fuel level alarm shutdown
- Automatic Fuel Filling System
- Engine oil feeding and drain pump
- Auto Transfer Switch(ATS)
- Parallel control panels
- Circuit Breaker MCCB & ACB
- Remote Control Panel
- weatherproof/soundproof Canopy
- Trailer type Gensets

QUALITY STANDARDS

ISO9001:2000,ISO14000,ISO9048
ISO8528 BS4999
BS5514,AS1359,ICE34
CE Compliance

Gensets Dimensions & Weight

Open type:L*W*H,mm
1794×960×1350
Enclosure type:L*W*H,mm
2240×960×1680